S

Front

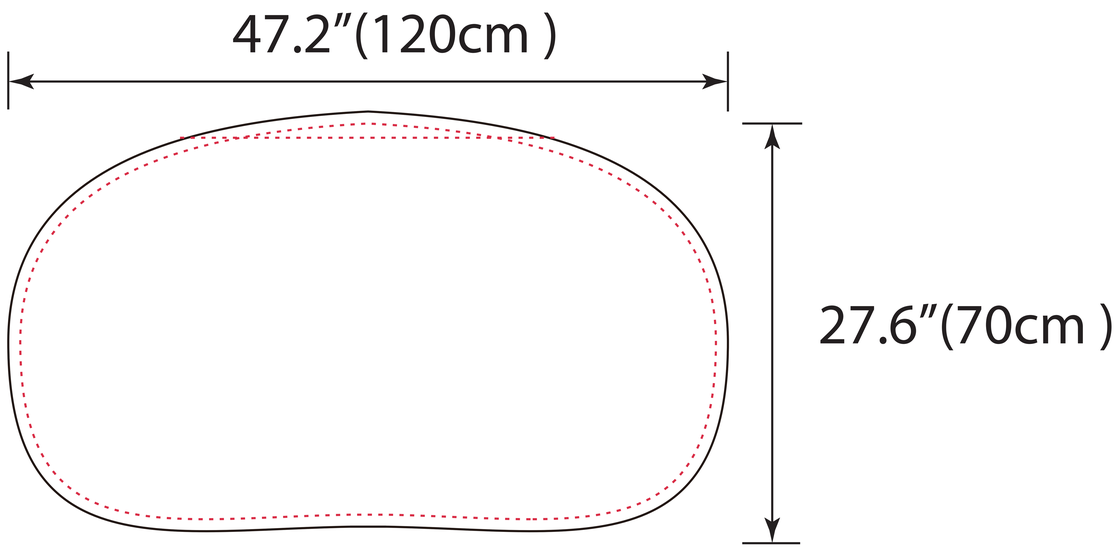
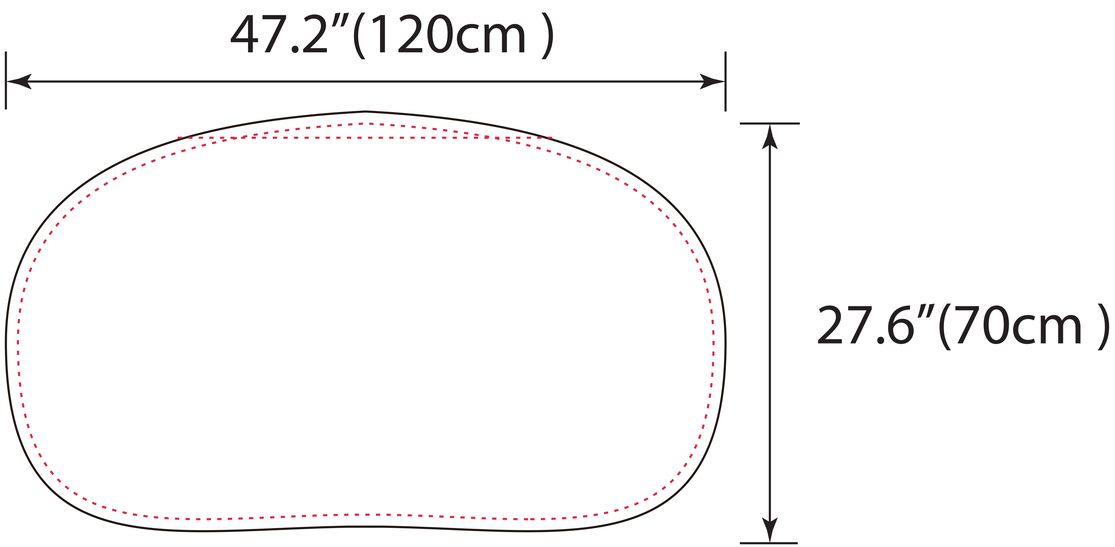
Back