M

Front

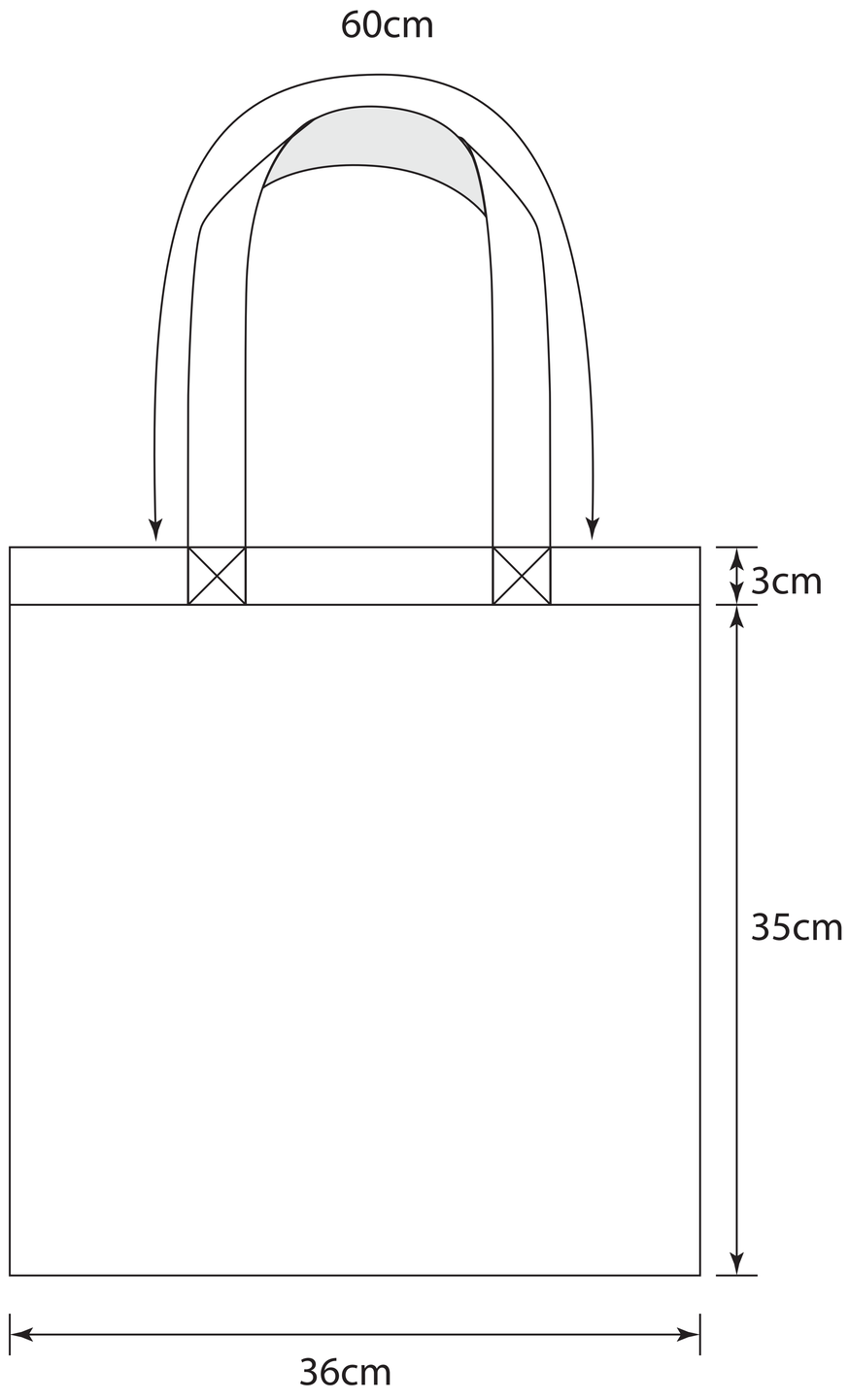
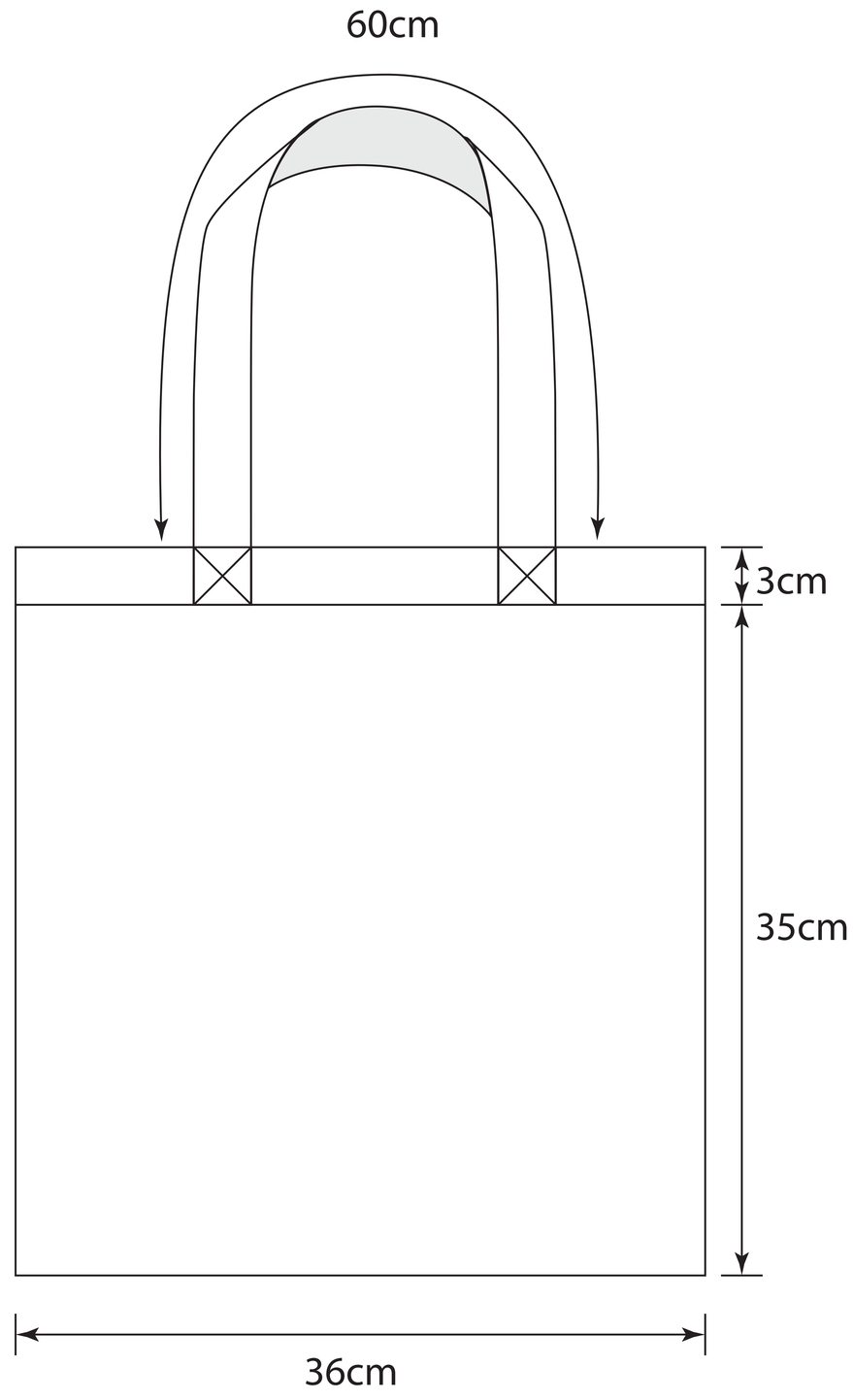
Back