CM-BC 90X100CM

Front

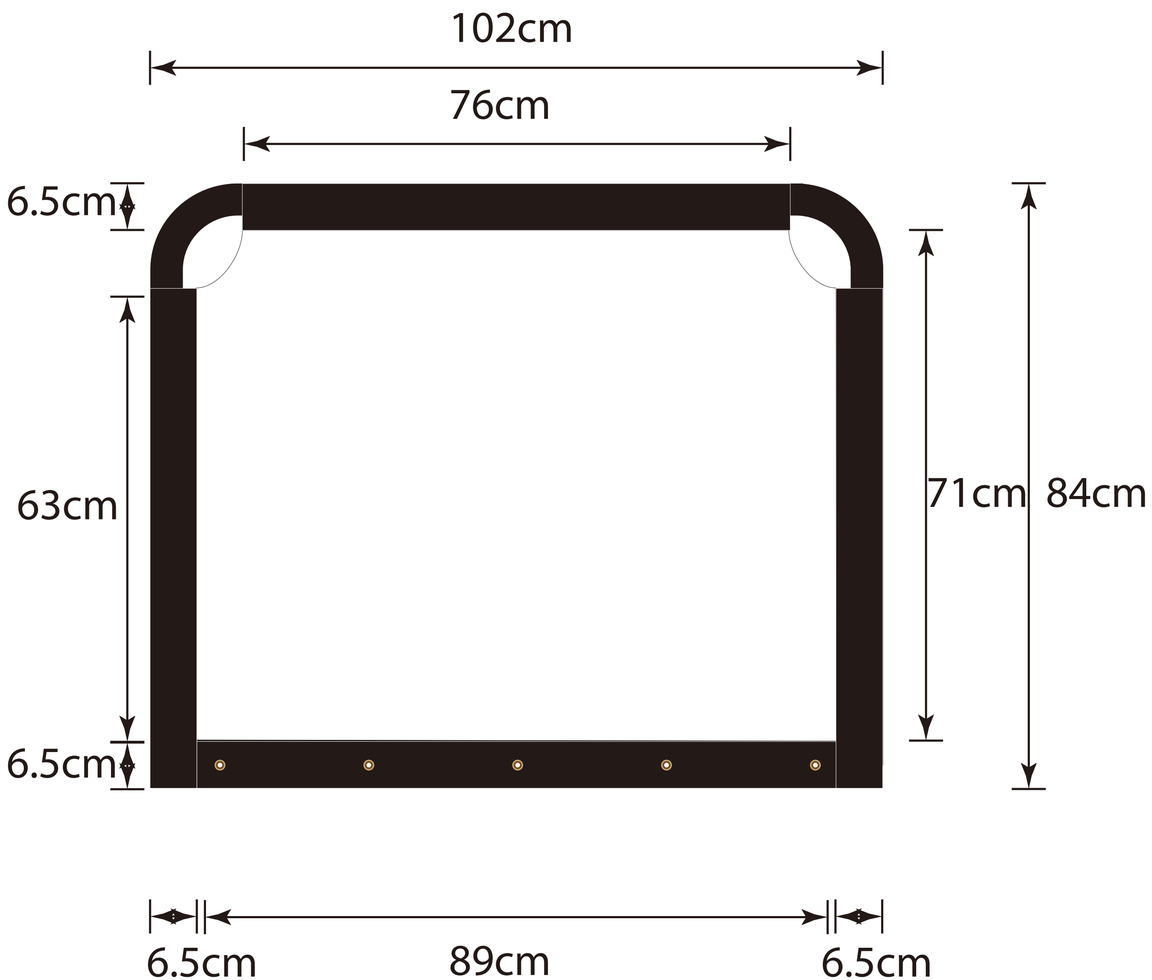
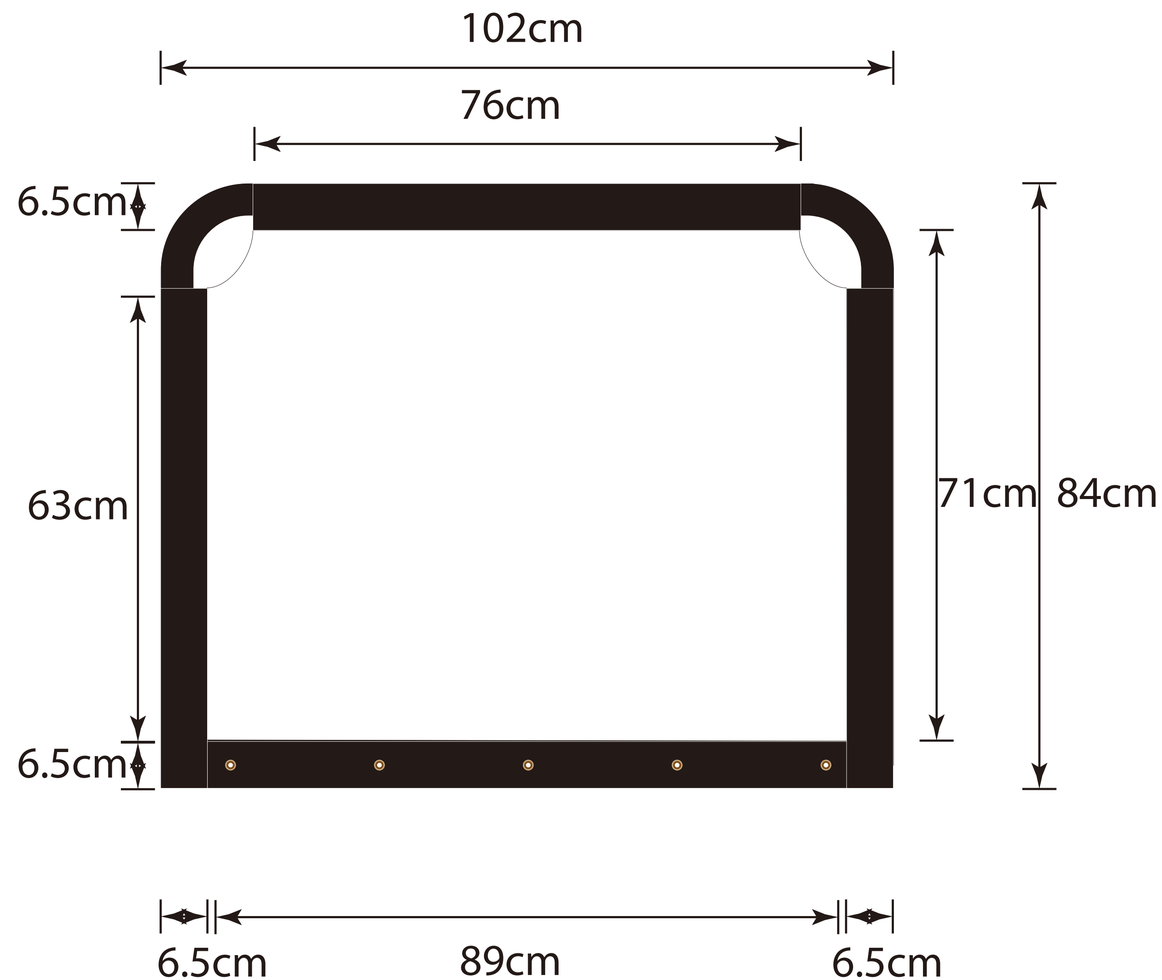
Back