S

Mat front

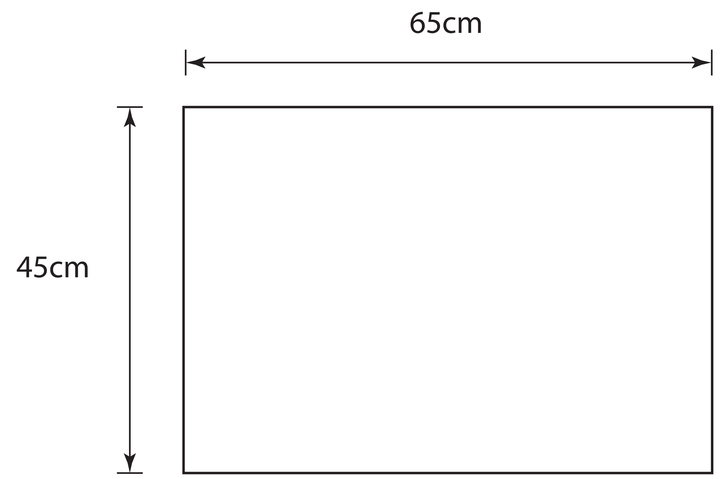

Mat Back

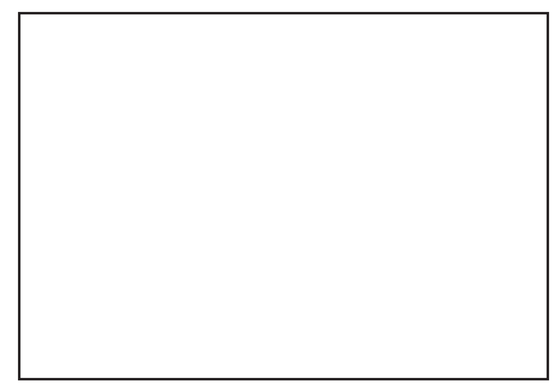

Inside

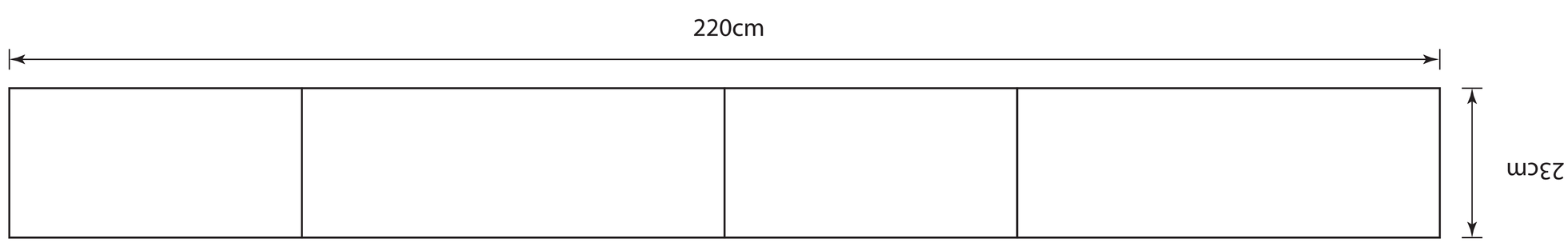

Outside

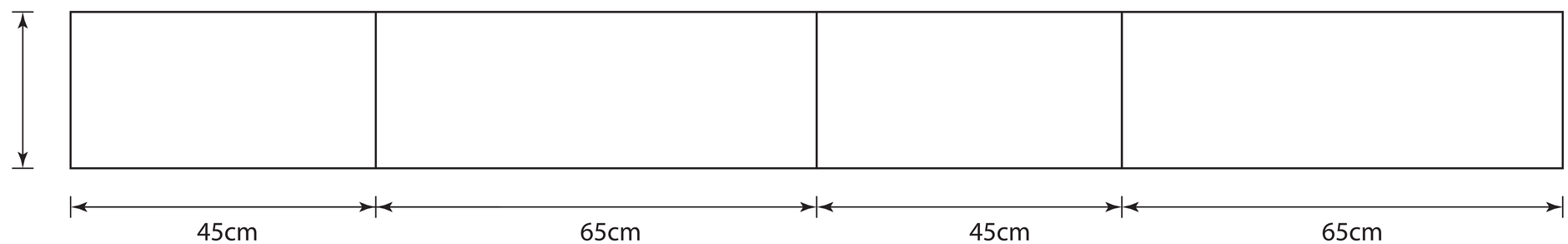

Left Front Right Back
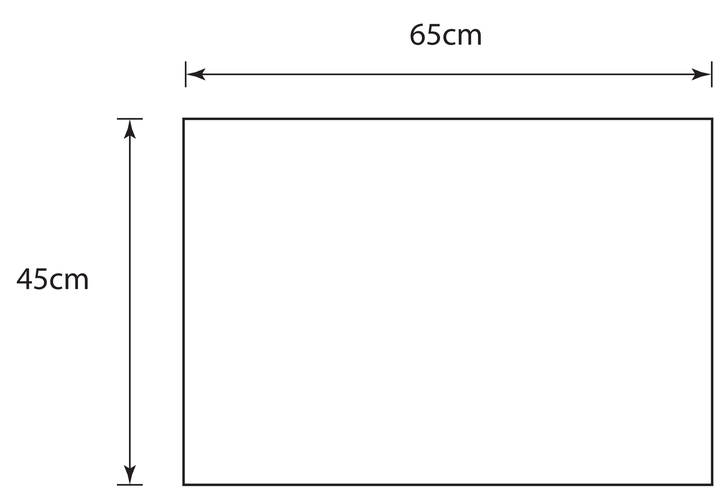
Bottom