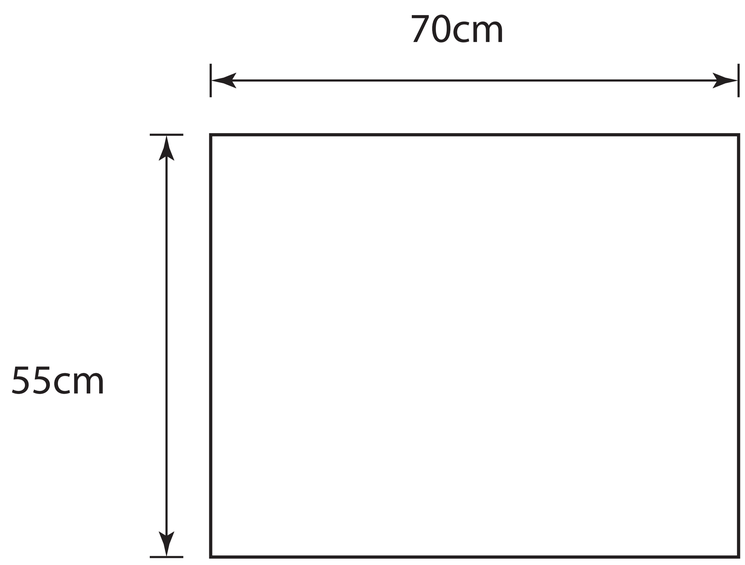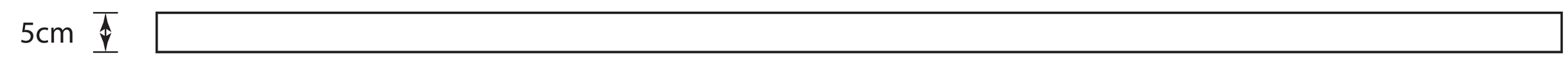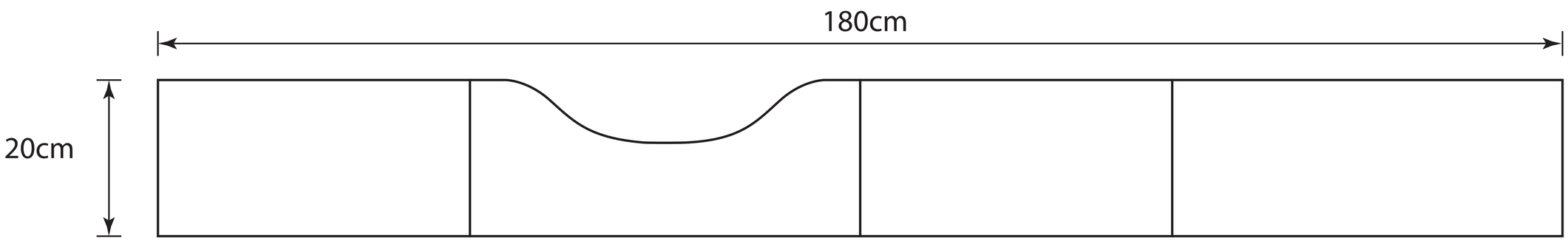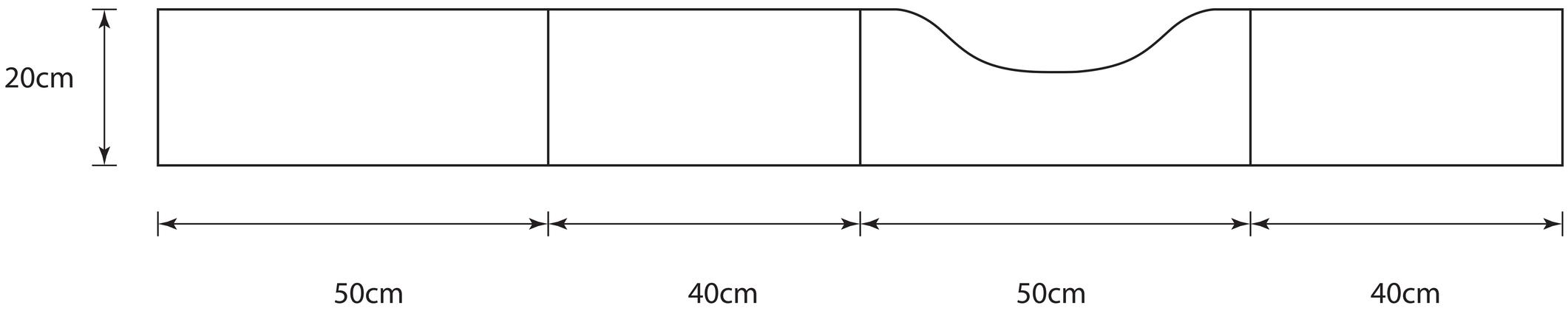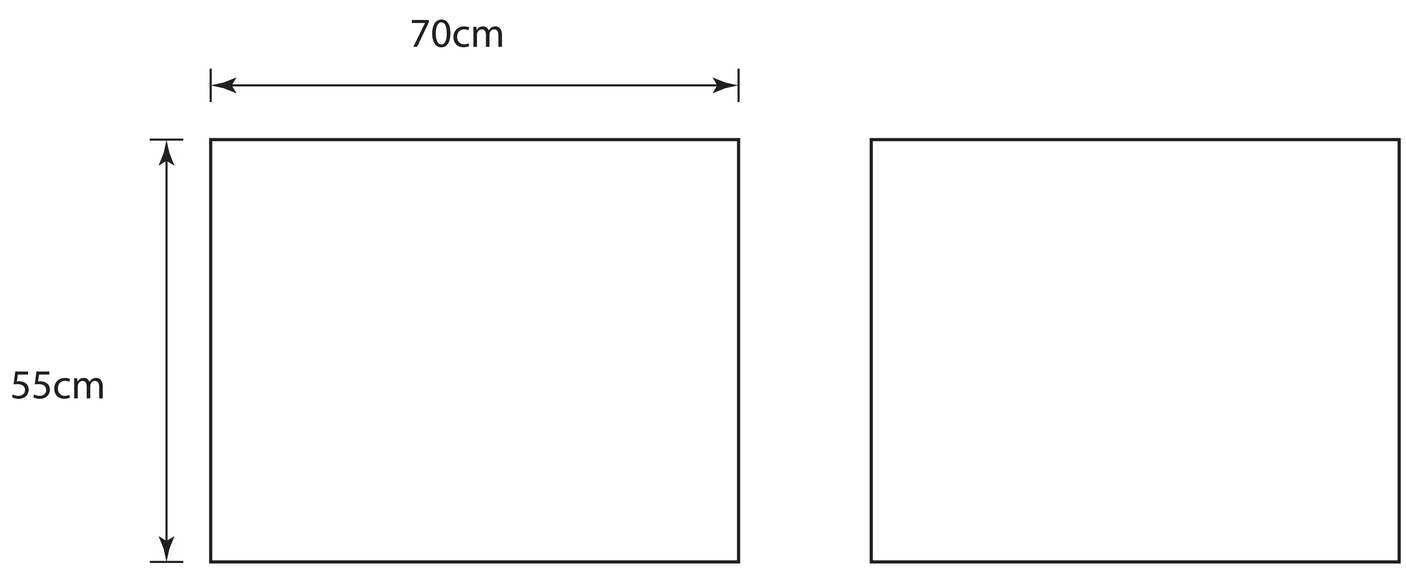# S