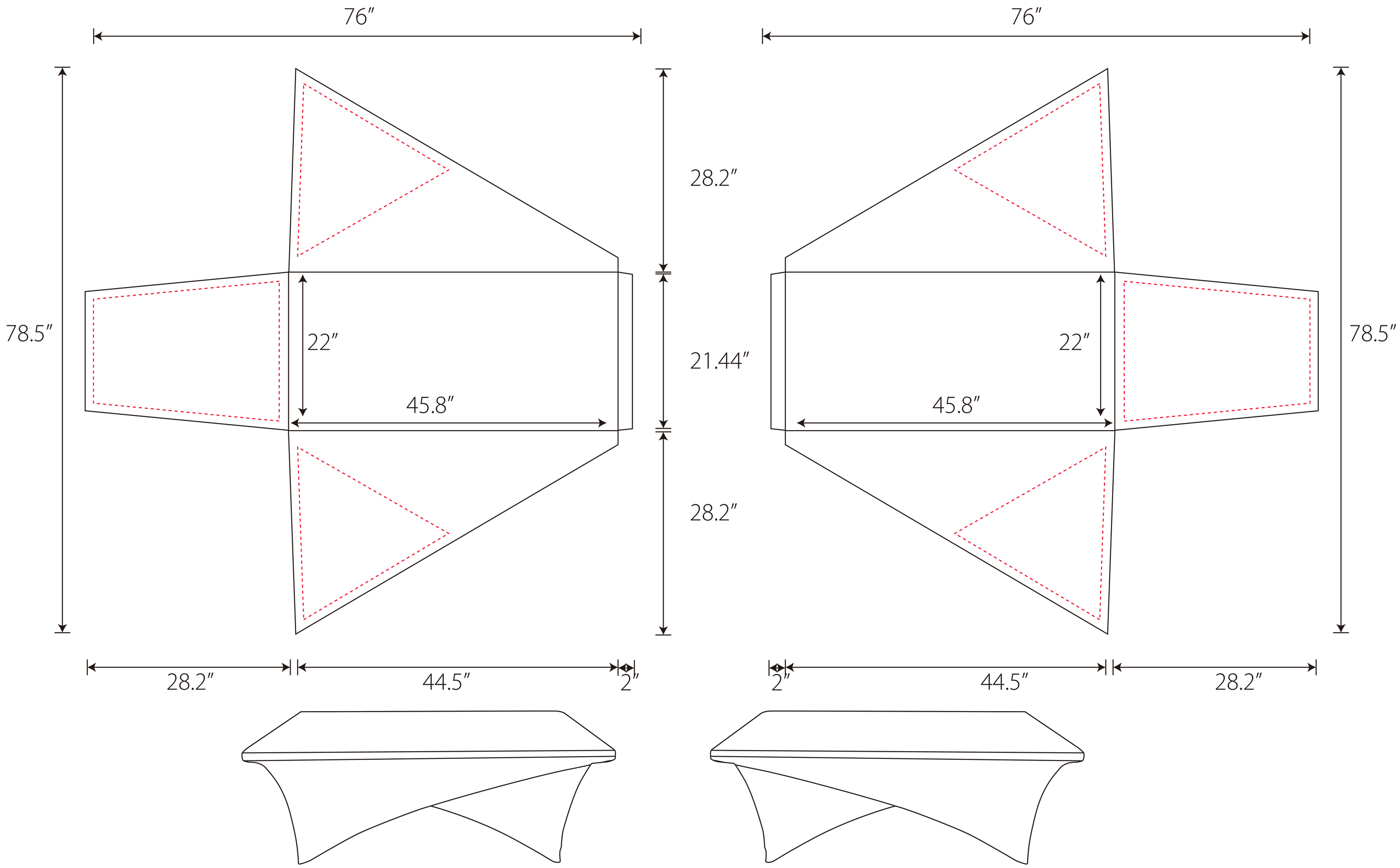4 FT Cross stretch table cover-240G-48″x24″x29″