32"x29" Round Stretch Table Covers-M-EP180G

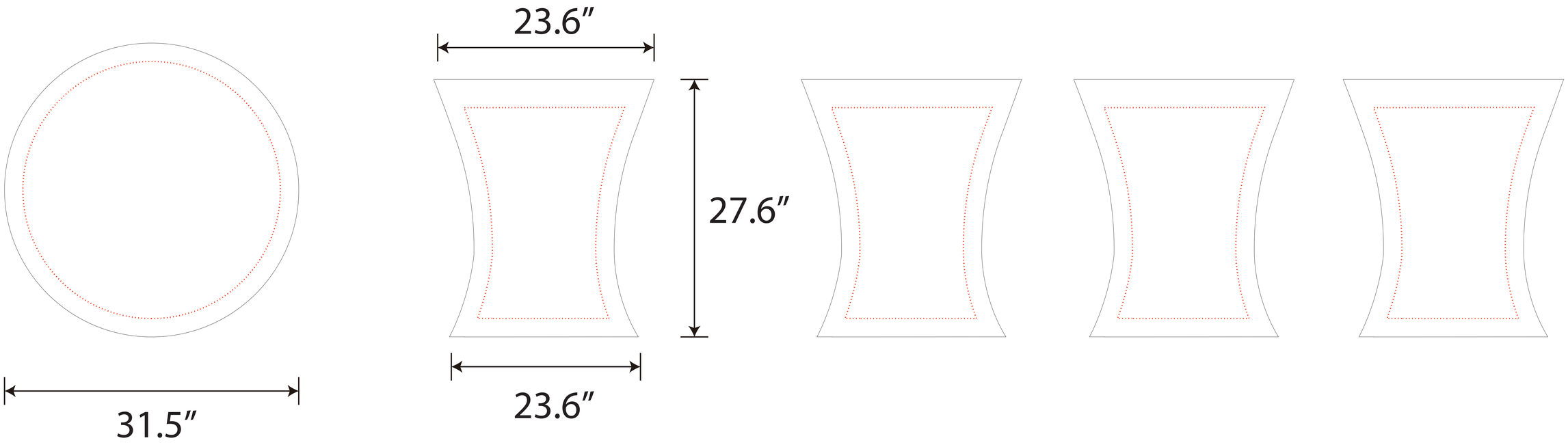

Tips: 1. Please put your main artwork inside the gray area
2. Please delete the layer before saving